NEW PRODUCT

JST

For W to B connection

SFV CONNECTOR

2.0mm Pitch

This SFV connector is a wire to board connector for connecting power supply and PCB and withstands high voltage. It is used for power supply of LED backlight in Liquid Crystal Display Television set.

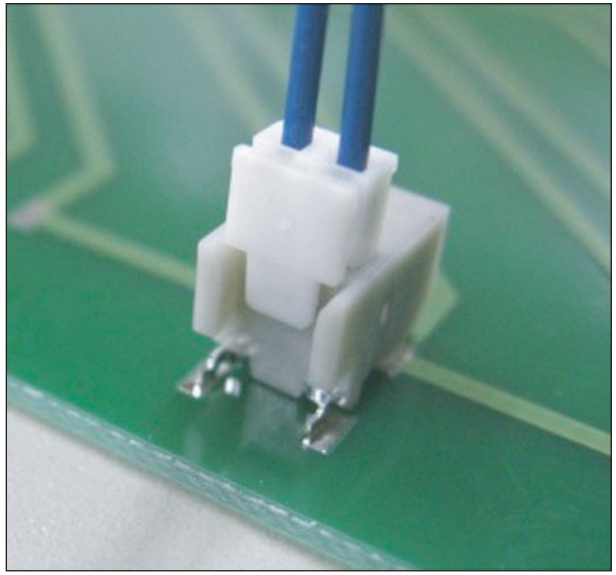

Crimp Disconnectable | SMT | Emboss

Features

- ***Withstand high voltage***
- ***Secure lock***
- ***Halogen free***

Specifications

- Current rating : 1.0 A AC,DC (AWG#28)
- Voltage rating : 300 V AC,DC
- Temperature range : –25°C to +85°C (including temperature rise in applying electrical current)
- Contact resistance : Initial value/10 mΩ max. After environmental testing /20 mΩ max.
- Insulation resistance : 1,000 MΩ min.
- Withstanding voltage : AC1,700 V/1minute
- Applicable wire : Wire range /AWG#30 to AWG#28
- No.of Circuits : 2-circuit
- Part number : SGVH-002T-P0.2
  : BM02B-SFVH (HF)
  : SFVR-02V-S (HF)

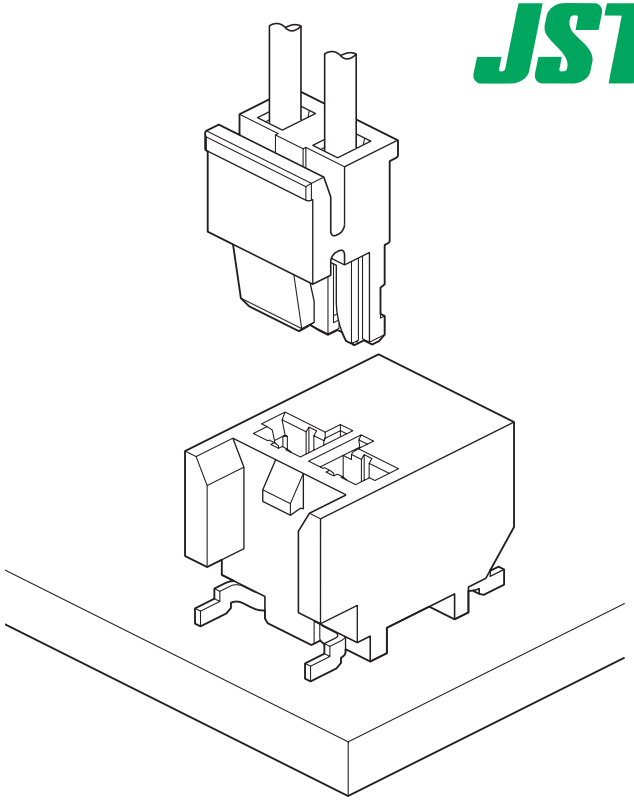

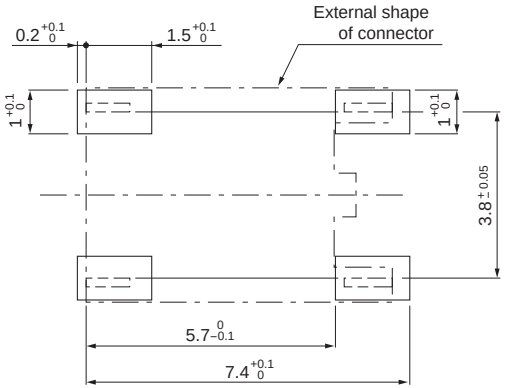

P.C.B Layout

J.S.T. MFG. CO., LTD.

http://www.jst-mfg.com